URU640 series

6,450 kg
LIFTING CAPACITY

APPROX. **20.7 m**
MAX. HOOK HEIGHT ABOVE GROUND

RADIO REMOTE CONTROL

SPECIFICATIONS

CRANE MODEL		URU646
Max lifting capacity		6450 kg at 2.5 m
Max working radius		Min 0.89 m to Max 18.82 m
Max hook height (approx.)	Above ground	20.7 m
	Below ground	22.4 m with 4-art line
Boom length		Min 4.72 m, Max. 19.1 m
Boom sections		6-section box beam type telescoping boom
Boom raise angle		0° to 78°
Slewing angle		360° continuous
Winch	Single line pull	15.68 kN {1600 kgf}
	Wire rope	6 x 26 WS + IWR / 11 mm x 111 m / 80.6 kN {8220 kgf}
Outriggers		Vertical jacks, double acting hydraulic cylinders with pilot-operated check valves / Horizontal beams, double acting hydraulic cylinders with pilot-operated check valves
Hydraulic pump	Rated pressure	19.6 MPa {200 kgf/cm2}
Hydraulic oil tank capacity		120 L
Safety devices		Pressure relief valve for hydraulic circuit / Counterbalance valves for boom raising and boom telescoping cylinders / Pilot-operated check valves for outrigger cylinders / Boom angle indicator with load indicator / Hook safety latch / Automatic mechanical brake for winch / Loadmeter / Level / Overwinding alarm / Warning horn / Automatic lock mechanism for slewing / Overloading alarm / Automatic stop for overloading / Emergency stop button / Outrigger interlock / Alarm for un-stored boom and outriggers / Three coloured lamp

W646

6 Sections Boom

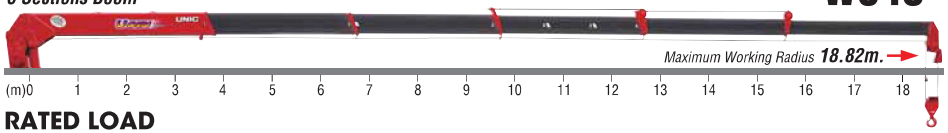

RATED LOAD

Working Radius	2.5	3.0	3.5	4.0	4.5	5.0	6.0	7.0	8.0	9.0	10.0	11.0	12.0	13.0	14.0	15.0	16.0	17.0	18.0	18.82
	6450	5150	4500	3850	3500 (4.44)															
	5800	5150	4500	3850	3400	3000	2400	1900 (7.36)												
			4000	3850	3400	3000	2400	2000	1700	1450	1250 (10.27)									
				2700	2550	2400	2050	1800	1600	1400	1250	1100	1000	900 (13.12)						
				2100	1950	1850	1650	1450	1350	1200	1100	1000	900	800	730	650	600 (15.97)			
						1400	1200	1100	1000	900	830	750	700	650	600	550	500	450	400	350

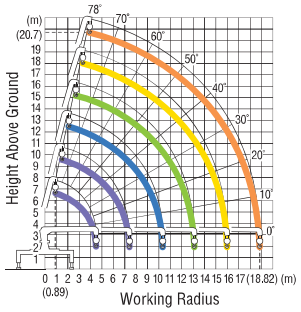

CRANE MOUNTING DIMENSIONS
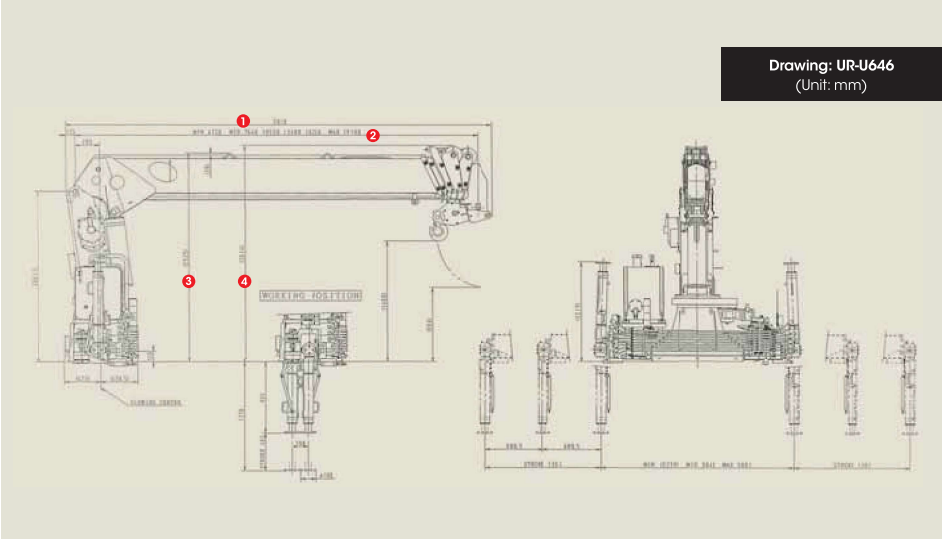
CRANE MODEL	1	2	3	4
UR-U646	5,018	Min. 4,720 ~ Mid. 7,640 ~ 10,550 ~ 13,400 ~ 16,250 ~ Max. 19,100	2,525	2,614